Innovative Smart Grid Control Technologies

Ganesh Kumar Venayagamoorthy, *Senior Member, IEEE*

***Abstract*-- The smart electric power grid will evolve into a very complex adaptive system under semi-autonomous distributed control. It will be spatially and temporally complex, non-convex, non-linear and non-stationary, with lots of variability and uncertainties beyond what the traditional power system experiences today. The distributed integration of intermittent sources of energy and energy storage to a power grid further adds complexity and challenges to modeling, control and optimization of the grid. Innovative control technologies are needed to handle the growing complexity of a smart grid, maximize the penetration of renewable energy, and provide maximum utilization of available energy storage, especially plug-in electric vehicles. In this panel paper, innovative control technologies, which are dynamic, stochastic, computational and scalable, and which show promise for achieving the goals of a smart grid, are presented.**

***Index Terms* — computational methods and intelligence, emission reductions, information technology, intelligent control, plug-in vehicles, smart grid, sustainable energy, virtual FACTS, wind farms**

I. Introduction

THE North American electric power grid built several decades ago is the world's largest single machine ever built by man, and it is ranked number one of all the greatest achievements of the 20th century by the US National Academy of Engineering (NAE). It is a complex adaptive system under semi-autonomous control. The complexity and interconnectivity of the electric power grid is increasing with distributed integration of renewable sources of energy and energy storage of all kinds.

This growing complexity requires different approaches to traditional modeling, control and optimization in power systems. These new approaches need either to be augmented with existing ones, or completely replaced in some cases, providing capabilities for rapid adaptation, dynamic foresight, sense-making of situations, fault-tolerance and robustness to disturbances and randomness.

The NAE committee on Engineering Grand Challenges identified 14 areas awaiting solutions in the 21st century, including finding energy solutions, reverse engineering the brain and securing cyberspace [1]. These are all very important for realizing a true smart grid.

This work was supported by the National Science Foundation, USA under CAREER Grant ECCS # 0348221 and EFRI # 0836017.

G. K. Venayagamoorthy is the Director of the Real-Time Power and Intelligent Systems Laboratory, Missouri University of Science and Technology, Rolla, MO 65409-0249 USA (e-mail: gkumar@ieee.org).

In many parts of the world today, the electric power infrastructure is a major area of research and development, especially with the introduction of smart grid technologies and task forces [2]-[6]. Professional societies across the world, including the IEEE [7] and IEEE Computational Intelligence Society [8], have launched task forces and working groups.

The smart grid can be viewed as a digital upgrade of the existing electricity infrastructure to allow for dynamic optimization of current operations and to incorporate dynamic gateways for alternative sources of energy production and storage. A smart grid [9], sometimes referred to as the Intelligent Grid/*Intelligrid* and *FutureGrid,* must have certain basic functions for modernization of the grid (as indicated in the Energy Independence and Security Act of 2007) [2], including:

- Have a self-healing capability.
- Be fault-tolerant by resisting attacks.
- Allow for integration of all energy generation and storage options, including plug-in vehicles.
- Allow for dynamic optimization of grid operation and resources with full cyber-security.
- Allow for incorporation of demand-response, demand-side resources and energy-efficient resources.
- Allow electricity clients to actively participate in the grid operations by providing timely information and control options.
- Improve reliability, power quality, security and efficiency of the electricity infrastructure.

In order to carry out the functions mentioned above, advanced monitoring, forecasting, decision making, control and optimization methods and algorithms are required. The innovative control technologies that show promise and have the potential to achieve smart grid goals are more likely to be those that are dynamic, stochastic, computational and scalable (DSCS). DSCS technologies are important to achieve global dynamic optimization (GDO) of the electric power grid.

The Electric Power Research Institute (EPRI) and the US National Science Foundation (NSF) co-sponsored an international workshop on this topic in April 2002 in Playacar, Mexico [10]. At this meeting, some challenges and potentials were brainstormed. Computational intelligence and adaptive critic designs were presented as promising and potential approaches for GDO. Four years later, NSF sponsored a workshop on Approximate Dynamic Programming (ADP) in Cocoyoc, Mexico [11], [12]. In this workshop, Werbos presented the challenge of how to build and understand systems with truly brain-like intelligence (computational intelligence) [13].

Computational intelligence holds promise for achieving DSCS smart grid innovative control technologies [14].

978-1-4577-1002-5/11/$26.00 ©2011 IEEE

II. Computational Intelligence

Computational intelligence (CI) is the study of adaptive mechanisms to enable or facilitate intelligent behavior in complex, uncertain and changing environments [15]. These adaptive mechanisms include those nature-inspired and artificial intelligence paradigms that exhibit an ability to learn or adapt to new situations, to generalize, abstract, discover and associate. The typical paradigms of CI are illustrated in Fig. 1 [16]. These paradigms can be combined to form hybrids as shown in Fig. 1, resulting in neuro-fuzzy systems, neuro-swarm systems, fuzzy-PSO systems, fuzzy-GA systems, neuro-genetic systems, etc. Thus, the hybrids are superior to any one of the paradigms.

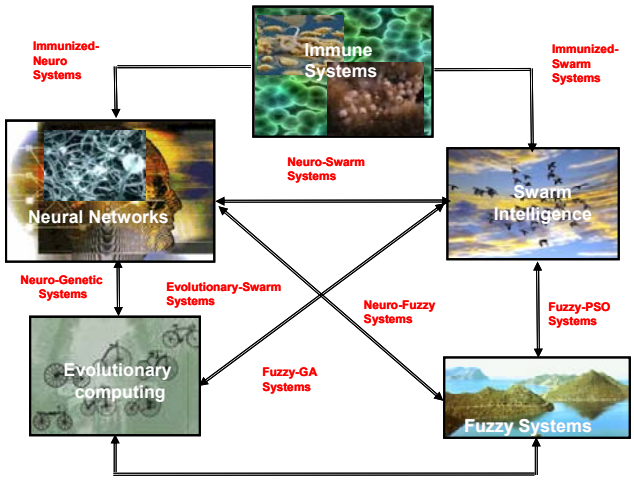

Fig. 1. Five main CI paradigms and typical hybrids.

Adaptive critic designs are based on combined concepts of reinforcement learning and approximate dynamic programming [17]. Adaptive critic designs (ACDs) use neural network-based designs for optimization over time. ACDs use two neural networks, the critic and action networks, to solve the Hamilton-Jacobi-Bellman equation of optimal control. The critic network approximates the cost-to-go function J of Bellman's equation of dynamic programming (1) and is referred to as the heuristic dynamic programming (HDP) approach in ACDs,

$$J(t) = \sum_{k=1}^{\infty} \gamma^k U(t+k), \tag{1}$$

where γ is a discount factor between 0 and 1, and $U(t)$ is a utility function or a local performance index. The action network provides optimal control to minimize or maximize the cost-to-go function J. Members of the ACD family vary in complexity and power [18].

III. Innovative Control Technologies

CI-based control technologies are powerful in the following typical ways:

- Neural networks and fuzzy systems can capture the nonlinearity in power systems and smart grids.
- Neural networks allow for behavioral modeling. Such models allow and are essential for making fast, dynamic decisions in a smart grid.
- Fuzzy and neuro-fuzzy systems allow for making fast and accurate decisions in an uncertain smart grid environment with a lot of variability.
- Artificial immune systems immunize against transients that result from disturbances and faults in smart grids, thus providing fault tolerance.
- Swarm intelligence and evolutionary computation allow for offline, large-scale optimization of smart grid operations.
- Adaptive critic design-based approaches allow for the design of robust, adaptive and optimal controllers in a dynamic, uncertain and variable smart grid environment.
- ACDs allow for dynamic optimization and scheduling in an uncertain and variable smart grid environment.
- CI approaches bring self-healing features to the smart grid.

In this paper, two typical applications of computational intelligence for smart grid control problems are presented. The first problem is scheduling plug-in electric vehicles in smart grid operations. The other problem presented is the development of the dynamic stochastic optimization-based controllers.

A. Scheduling Gridable Vehicles for Cost and Emission Reductions

The main sources of emission today are from the electric power and transportation sectors. One of the main goals of a cyber-physical energy system (CPES) is the integration of renewable energy sources (RESs) and gridable vehicles (GVs) to maximize emission reduction. Gridable vehicles are plug-in electric vehicles that take part in both V2G and G2V (Grid-to-Vehicle) operations. GVs can be used as loads, sources and energy storage in CPES. A large CPES is very complex considering all conventional and green distributed energy resources, dynamic data from sensors, and smart operations (e.g., charging/discharging, control, etc.) from/to the grid to reduce both cost and emissions. If a large number of GVs are connected to the electric grid randomly, peak load will be very high. The use of conventional thermal power plants represents an economically expensive and environmentally unfriendly solution to sustaining electrified transportation. Intelligent scheduling and control of elements of energy systems have great potential for evolving a sustainable, integrated electricity and transportation infrastructure.

A sustainable, integrated electricity and transportation infrastructure was studied in [19]. The primary contributions and emphases of this study are as follows: 1) illustration of the effectiveness of RESs and GVs for a sustainable CPES; 2) smart and flexible charging-discharging operations of GVs as loads and sources to obtain benefits from GVs for energy storage in a sustainable CPES; 3) maximum utilization of distributed RESs to reduce emission in a sustainable CPES; and 4) introduction of intelligent load leveling to reduce cost and emissions in a CPES.

The three models listed below were studied to illustrate the effect of GVs in electricity and transportation sectors. Details of these models and their formulations are given in [19].

- Model 1 – random model: GVs are charged/discharged randomly;
- Model 2 – intelligent dynamic load-leveling model: GVs are charged from conventional generation using load-leveling optimization.
- Model 3 – smart grid model: GVs are charged from the grid with renewable sources at off-peak hours and discharged to the grid at peak hours.

Conventional thermal units, GVs and RESs are considered in a complex, multi-dimensional search space with hundreds of constraints in CPES. Moreover, excess GV loads should be intelligently distributed to off-peak hours to level the demand. An optimization method is required to intelligently handle the system in CPES for maximum utilization of RESs in order to reduce both cost and emissions to an optimum level.

Particle swarm optimization (PSO) was used to minimize cost and emissions in a CPES. The advantages of using this algorithm include: i) the handling of binary, integer and real decision variables; ii) constraint handling; iii) easy, fast and robust implementation; and (iv) balanced local and global search abilities.

Binary and integer PSOs were used to reduce the search space dimension for this problem. Conventional units and GVs are represented by binary and integer numbers, respectively. Binary PSO was used to determine the optimal on/off states of conventional power plant units. Integer PSO was used to determine the optimal number of GVs in the constrained system. Real PSO was used to determine the optimal levels of solar and wind power. Lambda iteration was used to dispatch energy resources [19].

Fig. 2 shows a V2G/G2V operation distribution schedule obtained using PSO for the 10-unit system with 50,000 vehicles in a CPES. Most of the vehicles are connected to the grid at hours 1, 12, 20, and 24 because demand is either very high or very low at those hours. V2G takes place from hours 8 to 15 and again at hours 19 to 21, when demand is high. However, G2V occurs from hours 1 to 7, 16 to 18, and 22 to 24, when demand is low.

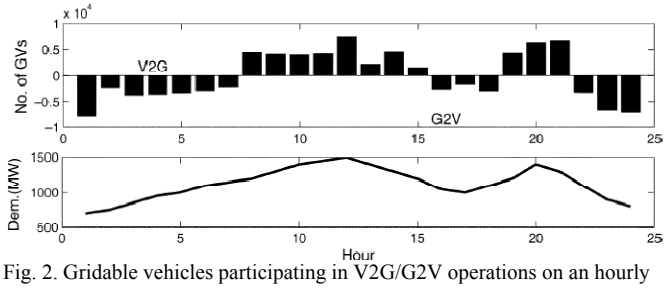

Fig. 2. Gridable vehicles participating in V2G/G2V operations on an hourly basis in a CPES.

Data and results are summarized in Table I for Models 2 and 3 (mentioned above). The smart grid model offers the maximum emission reduction of all three models.

TABLE I [19]
SUMMARY OF INPUT DATA AND RESULTS OF 10-UNIT SYSTEM IN CPES

Item	Value
Transportation sector	
Average distance covered by a vehicle	12,000 miles/year
Number of registered GVs	50,000
Average distance covered by GVs per kWh	4.00 miles
Energy needed by a GV per day	8.22 kWh
Energy needed by 50,000 GVs per day	411 MWh
Typical percentage time a GV is parked	95%
Average emission from a light weight vehicle	1.2 lb/mile
Emission from 50,000 vehicles in transportation sector per day (year)	895.010 tons (326,678.766 tons)
Intelligent dynamic load leveling model	
Extra emission from power plants to supply energy to 50,000 GVs during one day (year)	491.311 tons (179,328.515 tons)
Net emission reduction from power system and transportation sector for 50,000 GVs per day (year)	403.699 tons (147,350.251 tons)
Smart grid model: Capital cost	
Extra energy needed for the smart grid model	750 MWh per day
Wind energy and solar energy ratio (location dependent)	2:1
Capital cost of solar power	$5.0/W
Capital cost of wind power	$1.0/W
Solar farm size (based on some assumption of average solar insolation)	40 MW
Wind farm size (based on some assumption of average wind speed)	25.5 MW
Total capital investment for RESs in the smart grid model with 50,000 GVs	$225.5 million
Smart grid model: Benefits	
Emission reduction from power plants for 50,000 GVs and RESs per day (year)	1,233.589 tons (450,259.985 tons)
Total emission reduction from power plants and transportation sector for 50,000 GVs and RESs per day (year)	2128.599 tons (776,938.751 tons)
Total operational cost reduction from power system and transportation sectors for 50,000 GVs and RESs in CPES per day (year)	$217,687.73 ($79,456,021.45)

Note: Per year calculation is shown in the parenthesis.

B. Dynamic Stochastic Optimization-Based Control

A conceptual framework of applying ACDs to power system optimizations, namely dynamic stochastic optimizations such as for power flow control, was first introduced in [20] and then in [21] to incorporate prediction and optimization over power system stochastic disturbances.

ACDs were applied to carry out dynamic optimization of several variables in an IEEE14 bus multimachine power system containing a unified power flow controller (UPFC) [22]. In addition, the identifiers and controllers were implemented as ObjectNets. ObjectNets brings about scalability. The objective of the critic network is to dynamically optimize the parameters of the different power system controllers in order to minimize the combined deviations of all the generators' speeds and terminal voltages and the UPFC shunt bus voltage. In other words, the global objective is to ensure transient and dynamic rotor angle and voltage stability of the generators and the UPFC shunt bus during the power system's operation. The schematic diagram of dynamic optimization with ObjectNets using the heuristic dynamic programming (HDP) ACD approach is shown in Fig. 3.

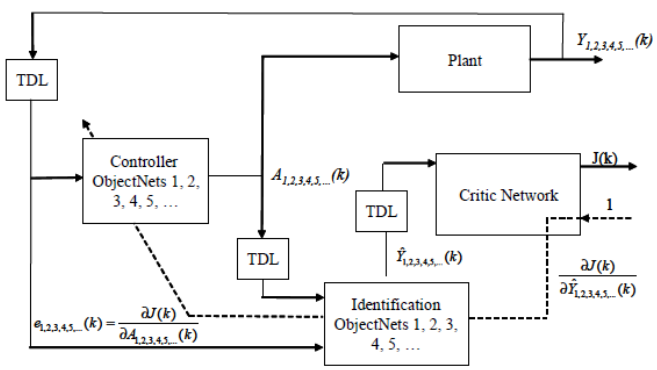

Fig. 3 Block diagram of dynamic optimization carried in the HDP-ACD framework using ObjectNets.

Fig. 4 shows the IEEE14 bus system with a UPFC installed between buses 2 and 3. Fig. 5 shows the UPFC shunt bus voltage during a three-phase, 100ms short circuit between buses 2 and 3.

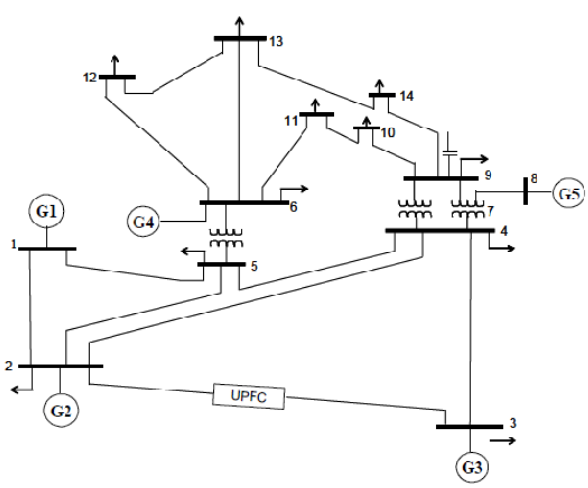

Fig. 4 IEEE 14 bus power system with a UPFC installed between buses 2 and 3.

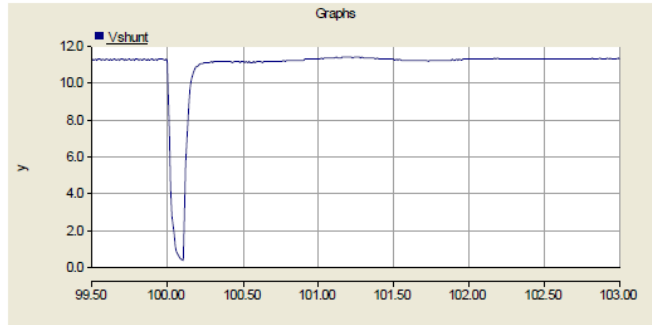

Fig. 5 UPFC shunt bus voltage for a three-phase, 100ms short circuit between buses 2 and 3 (y-axis is the voltage in kV and x-axis is time in seconds)

A second study by Liang illustrated an optimal power flow controller using ACDs on a 12 bus test system in [23] using the dual heuristic programming ACD approach and standard recurrent neural networks. Simulation results demonstrated promising steady-state and dynamic performances of the designed DSOPF controller under various operating conditions and system disturbances.

IV. Conclusion

The smart power grid becomes much more complex than a traditional power grid as time-varying sources of energy and new dynamic loads are integrated into it. The smart grid's complexity will evolve over time and require new technologies for efficient, reliable and secure operation and control as the demand for electricity increases. Innovative control technologies such as computational intelligence, adaptive critic designs and ObjectNets, which are dynamic, stochastic, computational and scalable (DCSC), are necessary to handle smart grid operation in an efficient and economical manner. This paper has briefly discussed two typical areas where CI and ACDs are applicable for solving the complex optimization and control problems of smart grids.

References

[1] Grand Challenges for Engineering (2010), National Academy of Engineering, http://www.engineeringchallenges.org/.

[2] Energy Independence and Security Act (2007) One Hundred Tenth Congress of the United States of America. http://energy.senate.gov/public/_files/getdoc1.pdf. [Online].

[3] Federal Smart Grid Task Force, U.S. Department of Energy, [Online]. Available: http://www.oe.energy.gov/smartgrid_taskforce.htm.

[4] "The smart grid: an introduction," U.S. Dept. of Energy, 2008, [Online] Available: http://www.oe.energy.gov/SmartGridIntroduction.htm.

[5] "NIST Framework and Roadmap for Smart Grid Interoperability Standards, Release 1.0," U.S. National Institute of Standards and Technology (NIST), 2010, [Online]. Available: http://www.nist.gov /public_affairs/releases/upload/smartgrid_interoperability_final.pdf

[6] European Technology Platform for the Electricity Networks of the Future, European Commission, [Online]. Available: http://www. smartgrids.eu.

[7] IEEE SmartGrid, [Online]. Available: http://smartgrid.ieee.org.

[8] IEEE Computational Intelligence Society's Task Force on Smart Grid: http://www.rtpis.org/sgtf.

[9] S. M. Amin, B. F. Wollenberg, "Toward a Smart Grid," *IEEE Power and Energy Magazine*, Vol. 3, No. 5, Sept.-Oct. 2005, pp. 34-41.

[10] R. G. Harley, J. Momoh, P. Werbos and M. Amin, "EFRI/NSF Workshop on Global Dynamic Optimization of the Electric Power Grid," Playacar, Mexico, April 10 – 13, 2002.

[11] W. Powell, J. Si, "NSF Workshop and Outreach Tutorials on Approximate Dynamic Programming," Cocoyoc, Mexico, April 3-6, 2006.

[12] J. Si, A. Barto, W. Powell, and D. Wunsch, *Hanbook of learning and approximate dynamic programming*, Wiley-IEEE Press, 2004. ISBN-13: 978-0471660545.

[13] P. J. Werbos, "Approximate Dynamic Programming for Real Time Control and Neural Modelling," in White DA and Sofge DA (Eds.), *Handbook of Intelligent Control,* Van Nostrand Reinhold, New York, 1992, ISBN 0-442-30857-4, pp. 493 – 525.

[14] G. K. Venayagamoorthy, "Potentials and Promises of Computational Intelligence for Smart Grids," *IEEE Power General Society General Meeting,* Calgary, AB, Canada, July 26 - 30, 2009, pp. 1-6.

[15] A. Engelbrecht, *Computational Intelligence: An Introduction*, John Wiley & Sons, Ltd, England, 2007, ISBN 978-0-470-03561-0.

[16] G. K. Venayagamoorthy, "A Successful Interdisciplinary Course on Computational Intelligence," *IEEE Computational Intelligence Magazine – A special issue on Education*, Vol. 4, No. 1, February 2009, pp. 14-23.

[17] P. Werbos, "New directions in ACDs: keys to intelligent control and understanding the brain," in *Proc. 2000 Int'l Joint Conf. Neural Networks (IJCNN)*, vol. 3, Como, Italy, July 2000, pp. 61-66.

[18] G. K. Venayagamoorthy, R. G. Harley, D. C. Wunsch, "Comparison of Heuristic Dynamic Programming and Dual Heuristic Programming Adaptive Critics for Neurocontrol of a Turbogenerator," *IEEE Transactions on Neural Networks*, vol. 13, no. 3, May 2002, Page(s): 764 -773.

[19] A. Saber, G. K. Venayagamoorthy, "Efficient Utilization of Renewable Energy Sources by Gridable Vehicles in Cyber-Physical Energy Systems," *IEEE Systems Journal*, Vol. 4, No. 3, September 2010, pp. 285 to 294.

[20] G. K. Venayagamoorthy, "CAREER: Scalable learning and adaptation with intelligent techniques and neural networks for reconfiguration and survivability of complex systems," NSF CAREER Award # 0348221, Jun. 2004 (submitted July 2003 to NSF).

[21] J. Momoh, "Towards Dynamic Stochastic Optimal Power Flow," in *Hanbook of learning and approximate dynamic programming*, J. Si, A. Barto, W. Powell, and D. Wunsch, Ed. Wiley-IEEE Press, 2004.

[22] G. K. Venayagamoorthy, "Dynamic Optimization of a Multimachine Power System with a FACTS Device Using Identification and Control ObjectNets," *39th IEEE IAS Annual Meeting on Industry Applications*, Seattle, WA, USA, October 3-7, 2004, pp. 2643-2650.

[23] J. Liang, R. G. Harley, and G. K. Venayagamoorthy, "Adaptive critic design based dynamic optimal power flow controller for a smart grid," in *Proc. 2011 IEEE Symposium Series on Computational Intelligence (SSCI) – Computation Intelligence Applications in Smart Grid (CIASG)*, Paris, France, Apr. 11-15, 2011.

BIOGRAPHY

Ganesh Kumar Venayagamoorthy received his PhD degree in electrical engineering from the University of Natal, South Africa. Currently, he is an Associate Professor of Electrical and Computer Engineering, and the founder and Director of the Real-Time Power and Intelligent Systems (RTPIS) Laboratory at Missouri University of Science and Technology (Missouri S&T). He was a Visiting Researcher with ABB Corporate Research, Sweden, in 2007.

His research interests are in the development and applications of advanced computational algorithms for real-world applications, including power systems stability and control, smart grid applications and sensor networks. He has published over 360 articles in refereed journals and conference proceedings. He is a lead-principal investigator on a 2008 NSF Emerging Frontiers in Research and Innovation Award.

Dr. Venayagamoorthy is a recipient of several awards, including a 2007 US Office of Naval Research Young Investigator Program Award, a 2004 NSF CAREER Award, the 2010 Innovation Award from the St. Louis Academy of Science, the 2010 IEEE Region 5 Outstanding Member Award, the 2006 IEEE Power and Energy Society Walter Fee Outstanding Young Engineer Award, a 2007 Missouri S&T Teaching Commendation Award, a 2006 Missouri S&T School of Engineering Teaching Excellence Award, a 2008, 2007 and 2005 Missouri S&T Faculty Excellence Award and a 2009 Missouri S&T Faculty Research Award.

Dr. Venayagamoorthy has been involved in the leadership and organization of many conferences and editorial boards of IEEE Transactions, including serving as the Chair of the 2011 IEEE Symposium of Computational Intelligence Applications in Smart Grid (CIASG). Dr. Venayagamoorthy is a Fellow of the Institution of Engineering and Technology (IET), UK, and the South African Institute of Electrical Engineers. He is a Senior Member of the IEEE and the International Neural Network Society (INNS), and a Member of the American Society for Engineering Education. He is a member of the Board of Governors of INNS.