Computational Intelligence in Smart Grids

Ronald G. Harley and Jiaqi Liang
School of Electrical and Computer Engineering
Georgia Institute of Technology
Atlanta, GA, USA
rharley@ece.gatech.edu, and jliang@gatech.edu,

***Abstract*—A smart electric power grid increases the connectivity, automation and coordination between generating plants, the networks and consumers by intelligent use of information. This paper focuses on the generation, transmission and distribution parts of the grid. These networks are nonlinear non-stationary stochastic systems and have expanded to become too complicated for humans to operate safely during severely changing conditions, as evidenced by catastrophic blackouts. In addition high power semiconductor switches have found application in power networks but the high switching speeds of these devices have not yet been fully exploited to stabilize a power grid in distress. Computational intelligence (CI) can smarten a grid in many ways. In the first place offline CI-based methods can assist the operator with anticipatory information. Furthermore, when the grid is stressed, CI-based multi-variable nonlinear optimal controllers can control the grid more reliably and more rapidly than humans, without requiring a traditional mathematical model of the grid. Some applications, as well as some ideas of smarts, are described.**

***Keywords*-Computational intelligence, smart grid, neural networks, adaptive critic designs, fuzzy systems, evolutionary computation.**

I. Introduction

The existing electric power infrastructure designed and developed in the 20th century is rapidly running up against its limitations: increasing transmission congestions, more frequent large blackouts, and limited flexibility to accommodate new ingredients such as wind and distributed energy resources [1]. The power grids have historically considered only one mission: reliably delivering electricity. The way to achieve this mission has always been expanding the grid, i.e., building more generations and lines, which is very costly.

Transmission systems nowadays have a basic data network, called the supervisory control and data acquisition (SCADA) system, for implementing applications such as the energy management system (EMS) for taking the economic operation into account and improving reliability [2]. However, such a data network is meant for only steady-state control and has no visibility to fast transient behaviors across the power networks. Most distribution systems still have no data network and rely heavily on passive/manual operation [2]. Many utilities only know there's an outage when a customer calls to report it [1].

Nevertheless, the power grids have become so complex that the traditional way of control and operation, with poor visibility and significant human involvement, is facing major challenges. Issues of large-scale blackouts and energy security have driven the electric power industry to rethink the questions of what are the missions of the future power grids and what are the options to achieve them. Besides building more lines, are there any other ways to improve the power grids? A concept of "smart grids" [1]-[3], aiming at improving power systems' reliability, security, sustainability, efficiency, flexibility and affordability, emerges to answer these questions.

Smart grid research and development activities have been carried out worldwide. In the U.S., a Federal Smart Grid Task Force was established to coordinate and integrate diverse activities in the U.S. government related to smart grid technologies, practices and services [4]. The European Commission established a SmartGrids European Technology Platform (ETP) to build a shared vision for the future European power networks, and to foster and support the development of smart grids in Europe [5]. IEEE launched a smart grid website as an integrated gateway to smart grid standards, education, publications and news from IEEE [6].

This paper first summarizes the high-level concept of smart grids, and then provides a brief overview on different computational intelligence (CI) techniques and how they can help achieve the smart grids. Examples of CI applications in power generation and delivery of smart grids are described.

II. Smart Grids and The Smartness

A. What is a Smart Grid

The smart grid concept covers a wide spectrum of the electrical power engineering, from generation to customers, from basic enabling devices to the power industry architecture. Different stakeholders have their own interests and visions in the smart grid. From the vision of the U.S. Department of Energy (DOE), a smart gird should be "*intelligent*, efficient, accommodating, motivating, opportunistic, quality-focused, resilient, and environment friendly" [1]. The European SmartGrids ETP defines the smart grids as "electricity networks that can *intelligently* integrate the behavior and actions of all users connected to it - generators, consumers and those that do both – in order to efficiently deliver sustainable, economic and secure electricity supplies" [5].

Although there is no single definition for the smart grid, at least one thing is sure: more and more new applications (renewable generation, distributed generation, large-scale

This work was supported in part by the National Science Foundation, USA, under Grants ECCS 0802047 and EFRI 0836017.

storage, plug-in hybrid electric vehicles, smart appliances, etc.) will be added to the existing power grid, and the smart grid includes all the enabling technologies that will make these new applications connected/integrated seamlessly to the power grid [7]. The U.S. National Institute of Standards and Technology (NIST) provides a high-level conceptual model for the smart grid [8], which includes seven domains: bulk generation, transmission, distribution, customers, operations, markets and service providers. Essentially, there are smart grid technologies for every corner of the traditional electric power infrastructure.

B. *What Makes a Smart Grid "Smart"*

A common interpretation of the smart grid is that it is the combination of the electric power and communication infrastructures, characterized by two-way communication and two-way energy flow. However, this interpretation sometimes gives a wrong impression that the deployment of the advanced metering infrastructure (AMI) [9] and phasor measurement units (PMUs) [10] equals a smart grid. It is true that advanced sensing and communication systems are indispensable parts of a smart grid, since they provide channels for monitoring critical data and sending back control commands. However, they don't provide the smartness for data analysis and decision making.

Intelligent use of information will be the core/brain of a smart grid. With the help of modern sensing and communication infrastructures, improving the intelligence in the operation, control, and protection of power systems is the only way to achieve the goals of the smart grids.

C. *How can Computational Intelligence Smarten the Grids*

CI techniques are nature-inspired methodologies for addressing complex problems where traditional rigorous methods are ineffective or infeasible. They have been widely applied to many challenging real-world problems in signal processing, control, communication, robotics, etc. CI applications in power systems are not new. One most successful application is the artificial neural network (ANN) load forecaster [28], which produces load forecasts from noisy data in a highly uncertain environment.

In the context of smart grids, many of the traditional static and deterministic power system problems will become dynamic and stochastic. Evidenced by the load forecasting example, CI techniques are promising candidates to smarten the power grids by providing solutions to the new smart grid challenges [11], [12]. A brief overview of key CI techniques is provided below.

CI techniques primarily consist of ANNs [13], fuzzy logic systems [14], evolutionary computation [15], [16], and their derivatives [17]. Among the ANN domain, different types of ANNs have been developed, such as the multilayer perception (MLP) neural networks [13], recurrent neural networks (RNNs) [13], echo-state networks (ESNs) [18], and self-organizing maps (SOMs) [19]. Intelligent closed-loop control methods using different ANNs and fuzzy systems have also been studied [17], [20], [21]. Out of the different intelligent control schemes, the adaptive critic designs (ACDs) proposed by Werbos [22] are among the most advanced ones. ACDs combine the concept of reinforcement learning and approximate dynamic programming (ADP), and enable controllers to deal with nonlinear nonstationary systems in the presence of noise and uncertainty [23], [24]. Fig. 1 shows the schematic diagram of the heuristic dynamic programming (HDP) method, a member in the ACD family. More details about the mathematical backgrounds, training algorithms, and applications of ACDs can be found in [24].

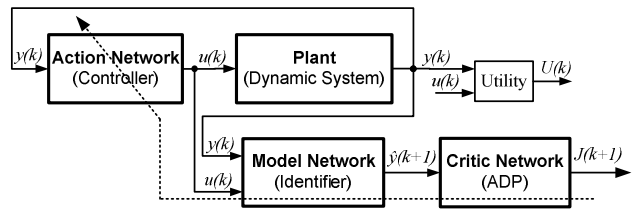

Fig. 1. General schematics of HDP in the ACD family.

III. Examples of CI Techniques for Smart Grids

A. *Intelligent Sensing*

Monitoring and control of any devices or subsystems in a smart grid depends on the quality and availability of sensor measurements. Corrupted or interrupted measurements, due to unexpected system conditions or malfunction of sensors, may result in incorrect operations of devices, and significantly affect the reliability of power systems.

For protective relays, measurement integrity is essential to ensure the performances of these high-speed devices. Measurements from instrument transformers are sometimes distorted due to saturation and transients during grid faults or changes in system operating points. ANN-based compensators were proposed to correct these measurement distortions and reconstruct the secondary measurements [25]. The ANN was trained offline to learn the inverse function of a current transformer for different primary current conditions.

In severe cases when sensor measurements are lost, a missing sensor restoration (MSR) scheme, using auto-associative neural networks (auto-encoders) and particle swarm optimization (PSO), was proposed by Qiao, as shown in Fig. 2 [26]. The auto-encoder was trained to extract important features, and automatically establish the auto-correlations and cross-correlations of sensor measurements. After training, when one or more sensor measurements were lost, the remaining healthy data, together with the PSO estimated missing data, were fed into the auto-encoder. The error signal E_S shown in Fig. 2 was used as the fitness function for PSO. Once E_S dropped to an acceptable level, the missing data were restored by S_R. This MSR scheme was then further used by Qiao to develop a sensor-fault-tolerant controller for a static synchronous series compensator (SSSC) [26]. The controller was shown to perform well even with multiple-sensor failures.

B. *Monitoring and Identification*

As one important aspect of smart grids, deployment of sensors and communication brings the opportunity of increasing the visibility of traditional power grids. However, to

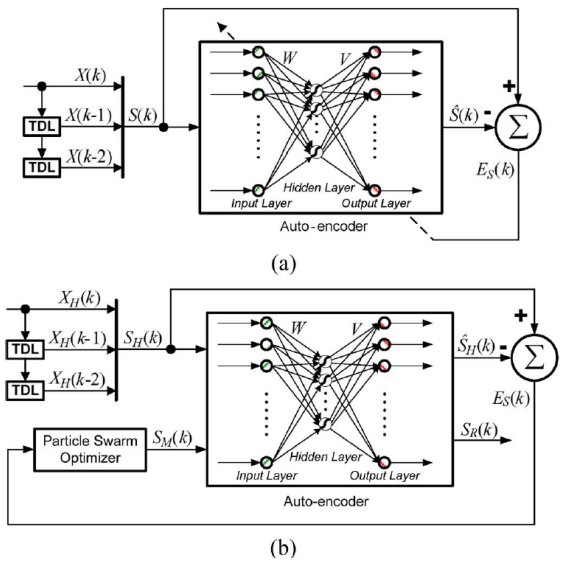

Fig. 3. MSR scheme: (a) Training of the auto-encoder. (b) Online restoration of missing sensor data. (S_H denotes healthy data, S_M denotes estimated data by PSO, and S_R denotes restored sensor data) [26].

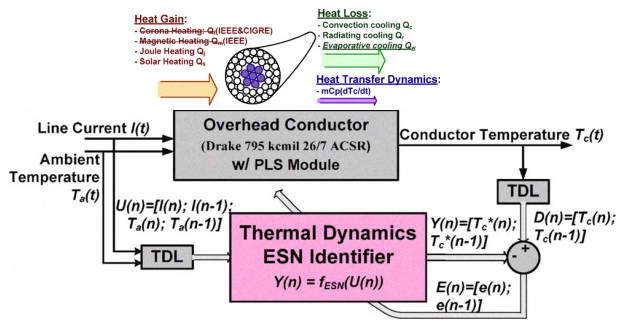

Fig. 4. ESN for identifying thermal dynamics of over-head power line [36].

correctly and efficiently interpret and use a large amount of power system measurement data is not an easy task. CI techniques have been applied to assist in this area.

Automated asset monitoring is the first step to understand the real-time conditions of a power system. For example, a power line thermal monitoring scheme will allow the system operator to know the exact safety margin of a power line, and to temporarily overload some power lines to ride through emergencies without exceeding their thermal limits. An echo-state network (ESN) approach was proposed by Yang to identify the power-line thermal dynamics and estimate the real-time line temperature directly from the current measurements, as shown in Fig. 3 [36].

Power quality monitoring and classification is another example of improving the visibility of power systems. While time-domain current and voltage measurements are often easy to obtain, CI techniques can help translate these measurements into useful power quality information. Two-stage power quality monitoring systems, which employed the wavelet transform for feature extraction and ANNs for power quality classification, have been reported [37]. A novel harmonic identifier using ESNs was proposed by Mazumdar to differentiate current harmonic contributions between a nonlinear load and a

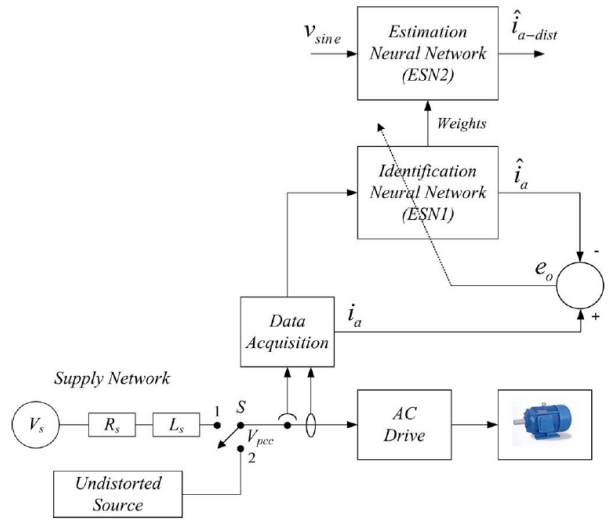

Fig. 2. Schematics of an ESN nonlinear load identifier [38].

distorted voltage source, as shown in Fig. 4 [38]. An ESN was first trained to identify the nonlinear load dynamics under the distorted voltage source, and then a pure sinusoidal signal was fed to the trained ESN to obtain the true current harmonic contribution of the nonlinear load.

C. Power System Operation Support

1) Forecasting

Load forecasting and the recent renewable generation forecasting are prerequisites for any power system to optimally schedule or dispatch its resources. The forecast accuracy directly impacts the economic and reliable operation of power systems. Because of the inherent complexity and uncertainty between the historical data and forecasts, CI techniques lend themselves well to these forecasting problems.

Over the past several decades, different conventional techniques, such as time series analysis, regression analysis and other statistical methods, have been attempted to tackle the problem of load forecasting [27]. However, besides the limited accuracy, most of these traditional models could not be easily adapted to different utilities [28]. To overcome these problems, an advanced ANN short-term load forecaster (ANNSTLF) was developed in the late 90s, as shown in Fig. 5 [28]. This load forecasting engine was driven by historical load and weather information, as well as weather forecasts. It became one of the most successful commercialized CI-based software packages, and has been in use by over 50 utilities in the US and other countries [29]. For microgrids with high volatility, Amjady *et al.* incorporated a differential evolution algorithm to adaptively and optimally select features for their ANN load forecaster [30].

Forecasting of intermittent renewable generation is a more complex problem due to its high uncertainty, variability, and temporal and spatial dependency. Physics-based numerical weather prediction (NWP) models have been widely used to forecast the global wind conditions and other meteorological parameters [31]. Day-ahead wind power forecasts are mostly generated from these NWP data. It has been shown that systems combining multiple CI techniques, including ANNs,

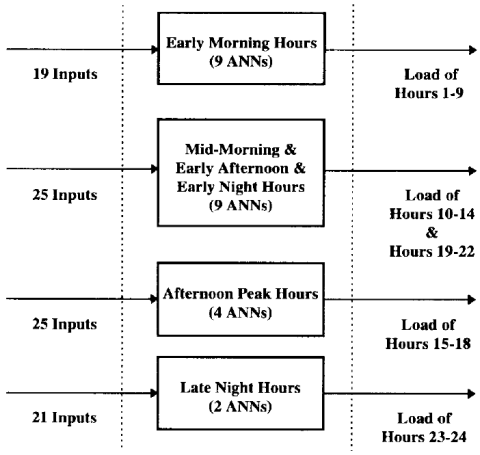

Fig. 6. The 2nd-generation ANNSTLF load forecasting engine [28].

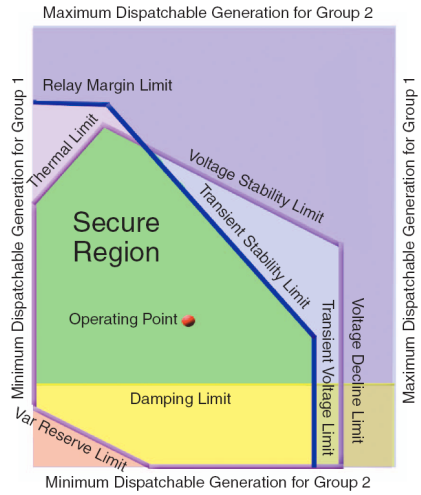

Fig. 5. Security nomogram showing a secure region [39].

fuzzy systems, PSO and support vector machines (SVMs), can effectively reduce the wind power forecast errors [31]. For hour-ahead wind forecasts, spatial information is usually useful, as wind fronts travel across different wind sites sequentially. Damousis proposed a fuzzy-system-based method to forecast short-term wind power based on measurements from neighboring wind sites [32].

2) Scheduling

Traditional power system day-ahead scheduling processes rely on deterministic optimization methods [33], given the fact that utility-level load forecasts have sufficient accuracy and the forecast errors are usually well bounded. However, when a significant level of intermittent renewable generation is considered, the traditional scheduling methods need to be revised because of the additional variability and uncertainty.

Fuzzy-optimization-based methods have been explored recently to handle the wind/solar energy uncertainty in the power system scheduling problem. The basic idea of fuzzy optimization is to relax the objective function and constraints by representing them as fuzzy functions. In [34], besides minimizing the fuel cost, an additional optimization objective, called expected energy not served, was formulated to incorporate the wind forecast uncertainty. This multi-objective problem was then translated into an optimization problem with a single fuzzy objective function. Others also applied the fuzzy optimization techniques to relax the power system equality constraints (power balance, wind availability, etc.) and inequality constraints (ramping limits, reserve requirements, etc.), and showed improved scheduling performances with the presence of wind uncertainty [35].

3) Security Assessment

One of the most challenging problems in power system operation is to assess the system dynamic security in real time. Power system security is a measurement of the power system's ability to survive imminent disturbances (contingencies) without interrupting service to customers [39]. Online dynamic security assessment (DSA) typically aims at finding the real-time secure operating region, as illustrated in Fig. 6 [39]. It allows the system operator to be aware of the real-time power system conditions. DSA typically requires wide-area measurements, reliable system models, evaluation of system stability/thermal/operational limits with different imminent disturbances, and sufficient computation resources to process information in near real time. Traditional DSA tools generally rely heavily on deterministic and exhaustive methods, which are very computational intensive and lack flexibility. ANNs and fuzzy systems, with their strong capability in pattern recognition, have great potentials to improve the traditional DSA tools by fast identification of insecure conditions and fast evaluation of their severity [40], [41].

D. Power System Control

Due to the nonlinearity, complexity and nonstationary characteristics of a power system, control of a power system and its components using traditional techniques usually yields sub-optimal performances. To fully utilize the existing grid assets, smart control methods need to be implemented, which would bring substantial economic and operational benefits.

1) Local Intelligent Control

Various intelligent control schemes have been investigated by many researchers for improving the control performances of power system local devices or subsystems, such as synchronous generators [42], [43], active filters [44], unified power flow controllers (UPFC) [45], static synchronous compensators (STATCOM) [46], SSSC [47], wind turbine generators [48]-[50], etc.

For example, active filters are often used to eliminate harmonic currents injected into the power grid from nonlinear industrial loads, as illustrated in Fig. 7 [44]. An industrial load, however, is often time-varying with complex nonlinear characteristics. Traditional linear PI-based controllers were found to be incapable of providing consistent control performances under different load conditions [44]. An indirect adaptive neurocontroller using ESNs was proposed by Dai, and was shown to improve the active filter performances even when the load changed nonlinearly [44].

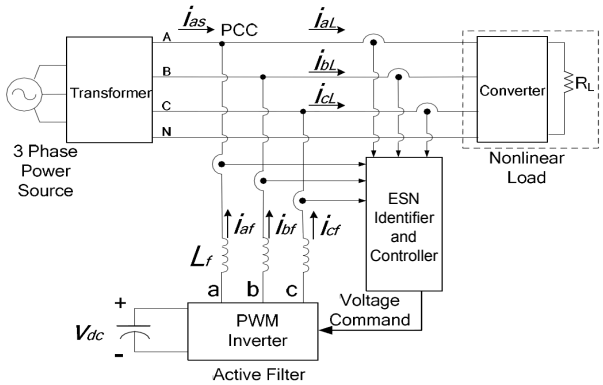

Fig. 8. Intelligent control scheme of an active filter [44].

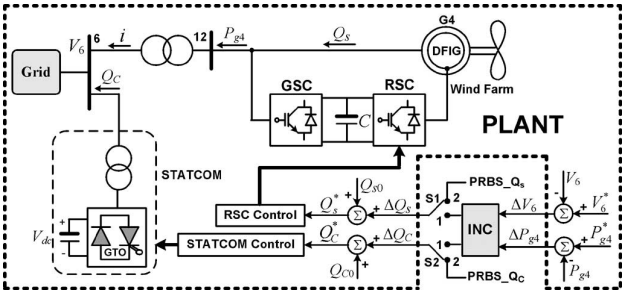

Fig. 9. Schematic diagram of the wind plant interface neurocontroller [48].

For wind turbine generators (WTGs), CI methods for improving their transient and steady-state control performances have been investigated for better grid integration. Many WTGs are installed in remote rural areas. As a result, dedicated local shunt FACTS devices, such as a STATCOM, are often installed to provide fast reactive power compensation and voltage support. An interface neurocontroller (INC) scheme was then proposed by Qiao to coordinate the transient reactive power control between the WTGs and a STATCOM, as shown in Fig. 8 [48]. Besides the transient control, it is also economically important for WTGs to capture maximum wind power, which requires an effective maximum power point tracking (MPPT) control algorithm. Traditional MPPT schemes require the wind speed as an input. To achieve wind speed sensorless control, neural networks [49] and fuzzy logic controllers [50] have been designed to provide wind speed estimations or perform online searching of the maximum power point.

2) Wide-Area Damping Control

Local damping controllers are usually ineffective in damping inter-area oscillations [51], which are characterized by groups of coherent generators swinging against each other. Because of the complexity of a power system, designing a wide-area stabilizing controller over a wide operation range is not a trivial task. The observer-based state feedback (SF) linear control [52] and the robust H∞ control using linear matrix inequality (LMI) [53] were applied respectively to design a multi-input multi-output wide-area damping controller. However, because of the linear nature of both control designs, different control loops were needed at different operating points [52], [53].

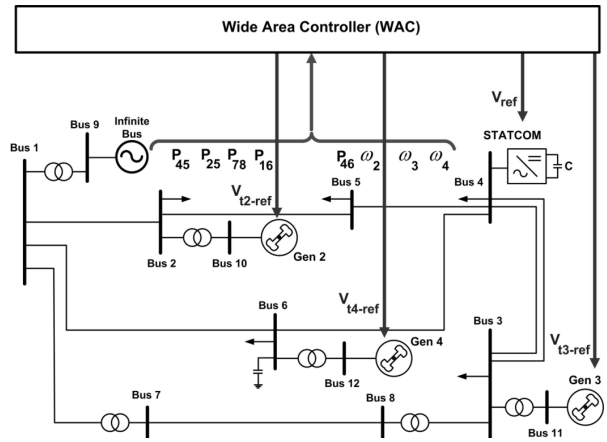

(a)

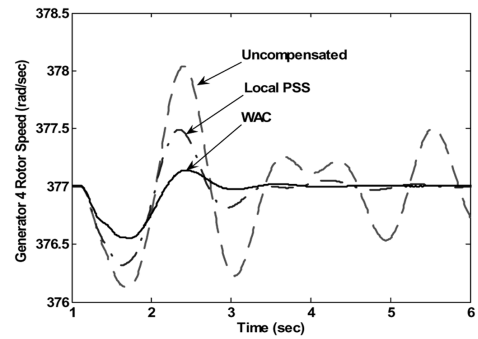

(b)

Fig. 7. WAC for a 12-bus power system: (a) schematic diagram, (b) damping performance of the WAC after a grid fault [54].

The above control techniques also suffer from requiring detailed knowledge of the system model and parameters, which are usually difficult to obtain for complex power systems. More advanced intelligent controllers using the ACD technique were then reported [54], [55], and showed a promising performance, as compared to the traditional observer-based SF and H∞-LMI controllers [55]. In particular, an ACD-based wide-area damping controller was designed by Mohagheghi to simultaneously control three generators and a STATCOM in a 12-bus power system, as shown in Fig. 9 (a) [54]. The system was tested under various operating conditions and disturbances. Fig. 9 (b) shows the damping performance from the intelligent WAC and traditional local power system stabilizers (PSS) [54].

3) Wide-Area Power Flow Control

Traditionally, power systems have separate control loops for active and reactive power control. For short-term active power balancing, power systems rely on a simple linear integral controller, called automatic generation control (AGC) [51], to regulate the system frequency. Reactive power supports are typically provided by locally controlled switched capacitor banks or on-load tap changing (OLTC) transformers [51]. These separate active and reactive power control loops work well when only small variations/disturbances are present in the system. With lack of coordination and optimization, the existing power system control scheme may not be able to optimally and securely control the power system in an environment with high short-term variability.

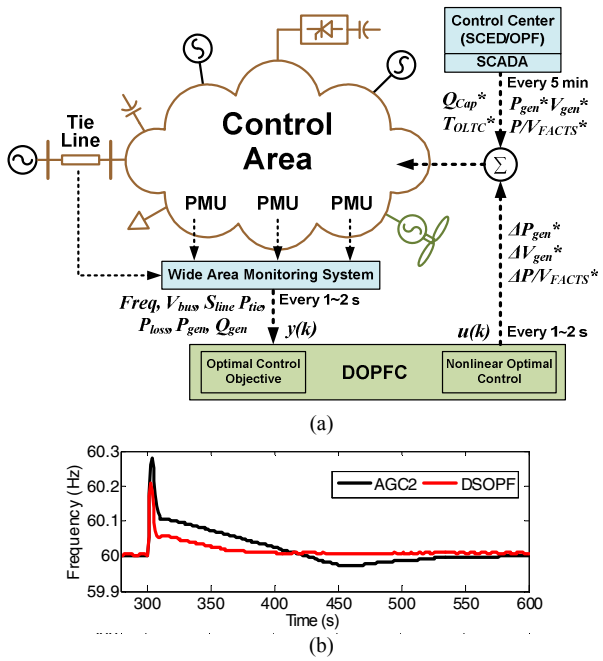

Fig. 11. ACD-based DOPFC for a power system: (a) schematic diagram, (b) DOPFC performance in a 12-bus system after a load tripping.

Fardanesh [56] described an ideal control scenario for power systems, where optimal operating conditions were achieved instantaneously by some closed-loop control algorithms, but how to design such a control algorithm remained unanswered. A conceptual framework of dynamic stochastic optimization in power systems using ACDs was first proposed by Venayagamoorthy [57], and then by Momoh [58], to incorporate prediction and optimization during power system stochastic disturbances. Liang followed this framework and proposed an ACD-based dynamic optimal power flow controller (DOPFC) for optimally control and coordinate power system AC power flow [59], as illustrated in Fig. 10 (a). A 12-bus power system was used to demonstrate the design and performance of this DOPFC. Fig. 10 (b) shows the frequency control results of the DOPFC after a load tripping.

E. Power System Protection

The goal of power system protection is to quickly identify and isolate the faulted parts of a power system and allow as much of the network as possible to remain in operation. It plays a crucial role in stopping disturbances from propagating across the network and preventing large blackouts. However, as power systems become interconnected, more complex, and more heavily loaded, traditional physical-model-based relay design schemes with fixed settings become less and less reliable [60]. CI-based protection schemes have shown promising performances in reliably detecting and isolating faults in complex situations.

1) Intelligent/Adaptive Relays

Because the operating point of a power system continuously changes, relays with fixed settings may mis-operate or mal-operate under certain operating conditions (especially when the system is heavily loaded). Intelligent or adaptive relays were thus introduced to have a smarter

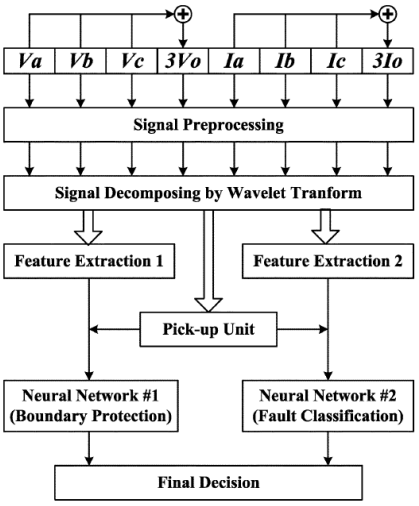

Fig. 10. Transmission line boundary protection scheme [63].

protection scheme. MLP neural networks and SOMs, combined with feature extraction methods such as Fourier transform and wavelet transform, have been used to design adaptive relays for series-compensated transmission lines (lines with variable impedance) [61], generator out-of-step protection [62], transmission line boundary protection (full line protection using only one-end information) [63], high impedance faults in distribution feeders [64], etc. Fig. 11 shows the schematic diagram of a transmission line boundary protection relay proposed in [63], where two SOMs were used, one for differentiating internal and external faults (ANN #1) and the other one for classifying fault types (ANN #2).

2) Intelligent Auto-Reclosers

Besides intelligent relays for isolating faults, ANNs have also been applied to design reclosing schemes for power line autoreclosers. An autorecloser is a circuit breaker with automatic reclosure after a protection trip. It is intended to improve power system reliability against temporary faults. Traditional autoreclosers reclose with a fixed time delay and have no intelligence to distinguish temporary faults from permanent faults. Advanced ANN-based reclosing schemes were proposed with functions of identifying temporary faults (thus a reclosing signal was sent) and estimating reclosing time delays for complete arc extinction (if a temporary fault was detected) [65], [66].

3) Intelligent Fault Locating

After a grid fault is isolated from the main system, it is always desired to locate the exact faulted section of the system, based on available measurements and relay/circuit breaker signals, for fast network reconfiguration and repair. However, such a locating task may not be easy when only limited measurements are available in distribution networks, or when incorrect relay operations occur.

An ANN-SVM-based approach was proposed by Thukaram to locate faults in radial distribution systems based on only the voltage and current measurements at the substation [67]. Fault locations along the same feeder and different fault types were successfully classified on the feature planes by SVMs and

ANNs. Cardoso proposed a modular ANN approach for locating faulted components based on relay signals even during events with backup relay tripping or incorrect relay operations [68]. Each ANN module was used to identify the true status of a component (a line, a transformer, or a bus) based on a combination of local relay responses. Fig. 12 shows the ANN module proposed for an autotransformer [68].

F. Other Applications in Smart Grids

There are many other examples where CI techniques can provide intelligence and smartness to a traditional power grid, with either incremental improvements or radical revolutions. Other applications may include: distribution network reconfiguration [69], power system planning and asset management [70], distributed energy resource coordination [71], electric energy storage system control [72], residential and home energy management [73], etc.

IV. Conclusions

Smart grids provide opportunities to improve the reliability, efficiency, and sustainability of the existing electric power infrastructure. The development of such a smart power grid requires multidisciplinary research and engineering efforts, and more importantly, it needs intelligence and innovations in virtually every aspect of electrical power engineering. Computational intelligence (CI), being an adaptive and flexible method, has been applied to solve many challenging real-world problems. This paper provides a comprehensive overview on various CI applications in the context of smart grids. The CI paradigm provides promising candidate solutions to deliver intelligence to a power grid.

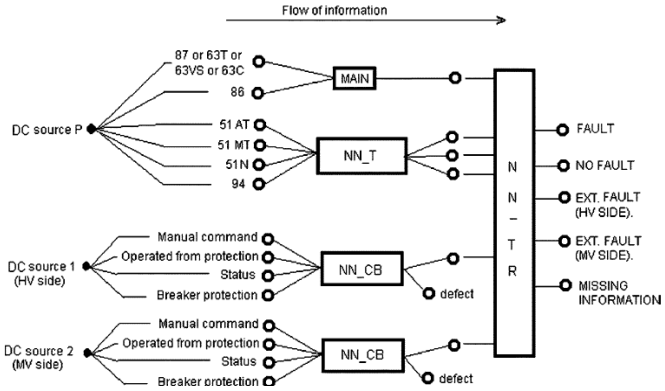

Fig. 12. ANN fault detection module for an autotransformer [68].

References

[1] "The smart grid: an introduction," U.S. Dept. of Energy, 2008, [Online]. Available: http://www.oe.energy.gov/SmartGridIntroduction.htm.

[2] H. Farhangi, "The path of the smart grid," *IEEE Power Energy Mag.*, vol. 8, no. 1, pp. 18-28, Jan./Feb. 2010.

[3] A. Ipakchi and F. Albuyeh, "Grid of the future," *IEEE Power Energy Mag.*, vol. 7, no. 2, pp. 52 - 62, 2009.

[4] Federal Smart Grid Task Force, U.S. Department of Energy, [Online]. Available: http://www.oe.energy.gov/smartgrid_taskforce.htm.

[5] European Technology Platform for SmartGrids, European Commission, [Online]. Available: http://www.smartgrids.eu.

[6] IEEE SmartGrid, [Online]. Available: http://smartgrid.ieee.org.

[7] A. Vojdani, "Smart Integration," *IEEE Power Energy Mag.*, vol. 6, no. 6, pp. 71-79, Nov./Dec. 2008.

[8] "NIST Framework and Roadmap for Smart Grid Interoperability Standards, Release 1.0," U.S. National Institute of Standards and Technology (NIST), 2010, [Online]. Available: http://www.nist.gov /public_affairs/releases/upload/smartgrid_interoperability_final.pdf

[9] H. Sui, H. Wang, M. Lu, and W. Lee, "An AMI System for the deregulated electricity markets," *IEEE Trans. Ind. Appl.*, vol. 45, no. 6, pp. 2104-2108, Nov./Dec. 2009.

[10] J. De La Ree, V. Centeno, J. Thorp, and A. Phadke, "Synchronized phasor measurement applications in power systems," *IEEE Trans. Smart Grid*, vol. 1, no. 1, pp. 20-27, Jun. 2010.

[11] G. K. Venayagamoorthy, "Potentials and promises of computational intelligence for smart grids," in *Proc. 2009 IEEE PES General Meeting*, Calgary, Canada, Jul. 26-30, 2009.

[12] H. He, "Toward a Smart Grid: Integration of computational intelligence into Power Grid," in *Proc. 2010 Int'l Joint Conf. Neural Networks (IJCNN)*, Barcelona, Spain, Jul. 18-23, 2010.

[13] S. Haykin, *Neural networks: a comprehensive foundation*, 2nd ed., Prentice Hall, 1998. ISBN-13: 978-0132733502.

[14] T. Takagi and M. Sugeno, "Fuzzy identification of systems and its applications to modeling and control," *IEEE Trans. Syst., Man, Cybern.*,vol. 15, pp. 116–132, 1985.

[15] T. Back, U. Hammel, and H. Schwefel, "Evolutionary computation: comments on the history and current state," *IEEE Trans. Evol. Comput.*, vol. 1, no. 1, pp. 3-17, Apr. 1997.

[16] Y. del Valle, G. K. Venayagamoorthy, S. Mohagheghi, J. Hernandez, and R. G. Harley, "Particle Swarm Optimization: Basic Concepts, Variants and Applications in Power Systems," *IEEE Trans. Evol. Comput.*, vol. 12, no. 2, pp. 171-195, Apr. 2008.

[17] J. S. R. Jang and C. T. Sun, "Neuro-fuzzy modeling and control," *Proc. IEEE*, vol. 83, no. 3, pp. 378–406, Mar. 1995.

[18] H. Jaeger, "The 'echo state' approach to analysing and training recurrent neural networks," *GMD Report 148*, German National Research Center for Information Technology, 2001.

[19] T. Kohonen, "The Self-Organizing Map," *Proc. IEEE*, vol. 78, no. 9, pp. 1464-1480, Sep. 1990.

[20] K. Narendra, "Neural networks for control theory and practice," *Proc. IEEE*, vol. 84, no. 10, pp. 1385-1406, Oct. 1996.

[21] D. Prokhorov, G. Puskorius, and L. Feldkamp, "Dynamical neural networks for control," in *A Field Guide to Dynamical Recurrent Networks*, Wiley-IEEE Press, 2001. ISBN-13: 978-0780353695.

[22] P. Werbos, "New directions in ACDs: keys to intelligent control and understanding the brain," in *Proc. 2000 Int'l Joint Conf. Neural Networks (IJCNN)*, vol. 3, pp. 61-66, Como, Italy, 24 Jul. 2000.

[23] D. Prokhorov and D. Wunsch, "Adaptive critic designs," *IEEE Trans. Neural Netw.*, vol. 8, no. 5, pp. 997-1007, Sep. 1997.

[24] J. Si, A. Barto, W. Powell, and D. Wunsch, *Hanbook of learning and approximate dynamic programming*, Wiley-IEEE Press, 2004. ISBN-13: 978-0471660545.

[25] H. Khorashadi-Zadeh and Z. Li, "Intelligence Based Data Acquisition System for Protective Relays," in *Proc. 2008 IEEE PES Transmission and Distribution Conf. and Exp.*, Chicago, IL, USA, Apr. 2008.

[26] W. Qiao, G. Venayagamoorthy, R. Harley, "Missing-sensor-fault-tolerant control for SSSC FACTS device with real-time implementation", *IEEE Trans. Power Del.*, vol. 24, no. 2, pp. 740-750, Apr. 2009.

[27] I. Moghram and S. Rahman, "Analysis and evaluation of five shortterm load forecasting techniques," *IEEE Trans. Power Syst.*, vol. 4, pp. 1484–1491, Nov. 1989.

[28] A. Khotanzad, R. Afkhami-Rohani, T. Lu, A. Abaye, M. Davis, and D. J. Maratukulam, "ANNSTLF—A neural network based electric load forecasting system," *IEEE Trans. Neural Netw.*, vol. 8, no. 4, pp. 835–846, Jul. 1997.

[29] EPRI Artificial Neural Network Short-Term Load Forecaster, Decision Systems International [Online]. Available: http://www.dsipower.com /Software/EPRI-ANNSTLF/tabid/1880/Default.aspx

[30] N. Amjady, F. Keynia, and H. Zareipour, "Short-Term Load Forecast of Microgrids by a New Bilevel Prediction Strategy," *IEEE Trans. Smart Grid*, vol. 1, no. 3, Dec. 2010.

[31] B. Ernst, B. Oakleaf, M. L. Ahlstrom, M. Lange, C. Moehrlen, B. Lange, U. Focken, and K. Rohrig, "Predicting the wind," *IEEE Power Energy Mag.*, vol. 5, no. 6, pp. 78-89, Nov./Dec. 2007.

[32] I. G. Damousis, M. C. Alexiadis, J. B. Theocharis, and P. S. Dokopoulos, "A Fuzzy Model forWind Speed Prediction and Power Generation in Wind Parks Using Spatial Correlation," *IEEE Trans. Energy Convers.*, Vol. 19, no. 2, pp. 352-361, Jun. 2004.

[33] J. Zhu, *Optimization of Power System Operation*, Wiley-IEEE Press, 2009. ISBN: 978-0-470-29888-6.

[34] B. Venkatesh, P. Yu, H. Gooi, and D. Choling, "Fuzzy MILP Unit Commitment Incorporating Wind Generators," *IEEE Trans. Power Syst.*, vol. 23, no. 4, pp. 1738-1746, Nov 2008.

[35] R. Liang and J. Liao, "A Fuzzy-Optimization Approach for Generation Scheduling with Wind and Solar Energy Systems," *IEEE Trans. Power Syst.*, vol. 22, no. 4, pp. 1665-1674, Nov 2007.

[36] Y. Yang, R. G. Harley, D. Divan, and T. G. Habetler, "Overhead Conductor Thermal Dynamics Identification by using Echo State Networks," in *Proc. 2009 Int'l Joint Conf. Neural Networks (IJCNN)*, Atlanta, Georgia, USA, Jun. 14-19, 2009.

[37] H. He and J. A. Starzyk, "A Self Organizing Learning Array System for Power Quality Classification based on Wavelet Transform," *IEEE Trans. Power Del.*, vo1.21, pp. 286-295, January, 2006

[38] J. Mazumdar and R. G. Harley, "Utilization of Echo State Networks for Differentiating Source and Nonlinear Load Harmonics in the Utility Network," *IEEE Trans. Power Electron.*, vol. 23, no. 6, pp. 2738-2745, Nov. 2008.

[39] K. Morison, L. Wang, and P. Kundur, "Power system security assessment," *IEEE Power Energy Mag.*, vol. 2, no. 5, pp. 30-39, Sep./Oct. 2004.

[40] K. Swarup and P. Corthis, "ANN approach assesses system security," *IEEE Comput. Appl. Power*, vol. 15, no. 3, pp. 32-38, Jul. 2002.

[41] J. M. Gimenez Alvarez and P. E. Mercado, "Online inference of the dynamic security level of power systems using fuzzy techniques," *IEEE Trans. Power Syst.*, vol. 22, no. 2, pp. 717-726, May 2007.

[42] J. He and O.P. Malik, "An Adaptive Power System Stabilizer Based on Recurrent Neural Networks," *IEEE Trans. Energy Convers.*, vol. 12, no. 4, pp. 413-418, Dec. 1997.

[43] G. Venayagamoorthy, R. Harley, and D. Wunsch, "Implementation of adaptive critic-based neurocontrollers for turbogenerators in a multimachine power system," *IEEE Trans. Neural Netw.*, vol. 14, no. 5, pp. 1047-1064, Sep 2003.

[44] J. Dai, G. Venayagamoorthy, R. Harley, K. Corzine, "Indirect adaptive control of an active filter using Echo State Networks," in *Proc. IEEE Energy Convers. Congress and Expo. (ECCE)*, Atlanta, GA, Sep. 2010.

[45] S. Mishra, "Neural-Network-Based Adaptive UPFC for Improving Transient Stability Performance of Power System," *IEEE Trans. Neural Netw.*, vol. 17, no. 2, pp. 461-470, Mar. 2006.

[46] S. Mohagheghi, G. K. Venayagamoorthy, and R. G. Harley, "Adaptive Critic Design Based Neuro-Fuzzy Controller for a Static Compensator in a Multimachine Power System," *IEEE Trans. Power Syst.*, vol. 21, no. 4, pp. 1744-1754, Nov. 2006.

[47] W. Qiao, R. G. Harley, and G. K. Venayagamoorthy, "Fault-Tolerant Indirect Adaptive Neurocontrol for a Static Synchronous Series Compensator in a Power Network With Missing Sensor Measurements," *IEEE Trans. Neural Netw.*, vol. 19, no. 7, pp. 1179-1195, Jul. 2008.

[48] W. Qiao, R. G. Harley, and G. K. Venayagamoorthy, " Coordinated reactive power control of a large wind farm and a STATCOM using heuristic dynamic programming," *IEEE Trans. Energy Convers.*, vol. 24, no. 2, pp. 493-503, Jun. 2009.

[49] M. Pucci and M. Cirrincione, "Neural MPPT Control of Wind Generators with Induction Machines without Speed Sensors," *IEEE Trans. Ind. Electron.*, vol. 58, no. 1, pp. 37-47, Jan. 2011.

[50] M. Simoes, B. Bose, and R. Spiegel, "Fuzzy Logic Based Intelligent Control of a Variable Speed Cage Machine Wind Generation System," *IEEE Trans. Power Electron.*, vol. 12, no. 1, pp. 87-95, Jan. 1997.

[51] P. Kundur, *Power system stability and control*, New York: McGraw-Hill, 1994. ISBN-13: 978-0070359581.

[52] R. Majumder, B. Chaudhuri, and B. C. Pal, "A probabilistic approach to model-based adaptive control for damping of interarea oscillations," *IEEE Trans. Power Syst.*, vol. 20, no. 1, pp. 367-374, Feb. 2005.

[53] H. Ni, G. T. Heydt, and L. Mili, "Power system stability agents using robust wide area control," *IEEE Trans. Power Syst.*, vol. 17, no. 4, pp. 1123–1131, Nov. 2002.

[54] S. Mohagheghi, G. Venayagamoorthy, and R. Harley, "Optimal Wide Area Controller and State Predictor for a Power System," *IEEE Trans. Power Syst.*, vol. 22, no. 2, pp. 693-705, May 2007.

[55] S. Ray, G. K. Venayagamoorthy, B. Chaudhuri, and R. Majumder, "Comparison of adaptive critic-based and classical wide-area controllers for power systems," *IEEE Trans. Syst., Man, Cybern. B, Cybern.*, vol. 38, no. 4, pp. 1002-1007, Aug. 2008.

[56] B. Fardanesh, "Future trends in power system control," *IEEE Comput. Appl. Power*, vol. 15, no. 3, pp. 24-31, Jul. 2002.

[57] G. Venayagamoorthy, "CAREER: Scalable learning and adaptation with intelligent techniques and neural networks for reconfiguration and survivability of complex systems," NSF CAREER Award # 0348221, Jun. 2004.

[58] J. Momoh, "Towards Dynamic Stochastic Optimal Power Flow," in *Hanbook of learning and approximate dynamic programming*, Wiley-IEEE Press, 2004. ISBN-13: 978-0471660545.

[59] J. Liang, R. G. Harley, and G. K. Venayagamoorthy, "Adaptive critic design based dynamic optimal power flow controller for a smart grid," in *Proc. 2011 IEEE Symp. Series Comput. Intell. (SSCI) – Comput. Intell. Appl. Smart Grid (CIASG)*, Paris, France, Apr. 11-15, 2011.

[60] Y. Zhang, M. Ilić, and O. Tonguz, "Mitigating blackouts via smart relays: a machine learning approach," *Proc. IEEE*, vol. 99, no. 1, pp. 94-118, Jan. 2011.

[61] Y. Song, A. Johns, and Q. Xuan, "Artificial neural-network-based protection scheme for controllable series-compensated EHV transmission lines," *IEE Proc. Gener. Transm. Distrib.*, vol. 143, no. 6, pp. 535–540, Nov. 1996.

[62] A. Y. Abdelaziz, M. R. Irving, M. M. Mansour, A. M. El-Arabaty, and A. I. Nosseir, "Adaptive Protection Strategies for Detecting Power System Out-of-step Conditions Using Neural Networks," *IEE Proc. Gener. Transm. Distrib.*, vol. 145, no. 4, pp. 387–394, Jul. 1998.

[63] N. Zhang and M. Kezunovic, "Transmission Line Boundary Protection Using Wavelet Transform and Neural Network," *IEEE Tran. Power Del.*, vol. 22, no. 2, pp. 859-869, Apr. 2007.

[64] M. Michalik, W. Rebizant, M. Lukowicz, S. Lee, and S. Kang, "High-Impedance Fault Detection in Distribution Networks With Use of Wavelet-Based Algorithm," *IEEE Trans. Power Del.*, vol. 21, no. 4, pp. 1793-1802, Oct. 2006.

[65] H. Khorashadi-Zadeh and L. Zuyi, "Transmission Line Single Phase Auto Re-closing Scheme Based on Wavelet Transform and Adaptive Fuzzy Neuro Inference System," in *Proc. 39th North American Power Symposium (NAPS)*, Las Cruces, NM, USA, Sep. 30-Oct. 2, 2007.

[66] F. Zahlay, K. Rama Rao, and T. Ibrahim, "A new intelligent autoreclosing scheme using artificial neural network and Taguchi's methodology," *IEEE Trans. Ind. Appl.*, vol. 47, no. 1, pp. 306-313, Jan./Feb. 2010.

[67] D. Thukaram, H. P. Khincha, and H. P. Vijaynarasimha, "Artificial Neural Network and Support Vector Machine Approach for Locating Faults in Radial Distribution Systems," *IEEE. Trans. Power Del.*, vol. 20, no. 2, pp. 710-721, Apr. 2005.

[68] G. Cardoso Jr., J. G. Rolim, and H. H. Zürn, "Application of neural-network modules to electric power system fault section estimation," *IEEE Trans. Power Del.*, vol. 19, no. 3, pp. 1034-1041, Jul. 2004.

[69] D. Das, "A Fuzzy Multiobjective Approach for Network Reconfiguration of Distribution Systems," *IEEE Trans. Power Del.*, vol. 21, no. 1, pp. 202-209, Jan. 2006.

[70] S. Kannan, S. Slochanal, and N. Padhy, "Application and comparison of metaheuristic techniques to generation expansion planning problem," *IEEE Trans. Power Syst.*, vol. 20, no. 1, pp. 466–475, Feb. 2005.

[71] Z. A. Vale, P. Faria, H. Morais, H. M. Khodr, M. Silva, and P. Kadar1, "Scheduling distributed energy resources in an isolated grid — An artificial neural network approach," in *Proc. 2010 IEEE PES General Meeting*, Minneapolis, MN, Jul. 25-29, 2010.

[72] T. K. A. Brekken, A. Yokochi, A. von Jouanne, Z. Z. Yen, H. M. Hapke, and D. A. Halamay, "Optimal Energy Storage Sizing and Control for Wind Power Applications," *IEEE Trans. Sustainable Energy*, vol. 2, no. 1, pp. 69-77, Jan. 2011.

[73] N. Gudi, L. Wang, V. Devabhaktuni, and S. S. S. R. Depuru, "Demand response simulation implementing heuristic optimization for home energy management," in *Proc. 2010 North American Power Symposium (NAPS)*, Arlington, TX, Sep. 26-28, 2010.